IJEEC

International Journal of Electrical Engineering and Computing

VOLUME 6
ISSUE 1
JUNE 2022

e-ISSN 2566-3682
UDC 621.3:004

University of East Sarajevo,
Faculty of Electrical Engineering,
Bosnia and Herzegovina

Academic Mind,
Belgrade, Serbia

International Journal of Electrical Engineering and Computing (IJEEC)

eISSN: 2566-3682
UDC: 621.3:004
Publication frequency: twice a year (June, December)

Publisher

University of East Sarajevo, Faculty of Electrical Engineering
Vuka Karadžića 30, 71123 East Sarajevo, Republic of Srpska, Bosnia and Herzegovina
http://www.etf.ues.rs.ba

Co-publisher

Academic Mind
Bulevar kralja Aleksandra 73, 11000 Belgrade, Serbia
http://www.akademska-misao.rs

Editors

Danijel Mijić, PhD, Editor, University of East Sarajevo, Bosnia and Herzegovina
Slobodan Lubura, PhD, Co-editor, University of East Sarajevo, Bosnia and Herzegovina
Budimir Kovačević, MSc, Technical Editor, University of East Sarajevo, Bosnia and Herzegovina

Editorial Board

Slobodan Milojković, PhD, University of East Sarajevo, Bosnia and Herzegovina
Predrag Petrović, PhD, IRITEL, Serbia
Milica Naumović, PhD, University of Niš, Serbia
Branko Perišić, PhD, University of Novi Sad, Serbia
Tomislav Šekara, PhD, University of Belgrade, Serbia
Jovan Mikulović, PhD, University of Belgrade, Serbia
Stevan Stankovski, PhD, University of Novi Sad, Serbia
Gordana Ostojić, PhD, University of Novi Sad, Serbia
Slobodan Đukanović, PhD, University of Montenegro, Montenegro
Duško Lukač, PhD, Cologne University of Applied Sciences, Germany
Miloš Krstić, PhD, IHP Frankfurt (Oder), Germany
Vlado Keselj, PhD, Dalhousie University, Canada
Darko Marčetić, PhD, University of Novi Sad, Serbia
Akhtar Rasool, PhD, Sharif College of Engineering & Technology, Pakistan
Nasri Abdelfatah, PhD, University of Tahri Mohammed Bechar, Algeria
Milomir Šoja, PhD, University of East Sarajevo, Bosnia and Herzegovina
Aleksandar Simović, PhD, University of East Sarajevo, Bosnia and Herzegovina
Vladimir Vujović, PhD, University of East Sarajevo, Bosnia and Herzegovina

Contacts

University of East Sarajevo, Faculty of Electrical Engineering
Vuka Karadžića 30, 71123 East Sarajevo,
Republic of Srpska, Bosnia and Herzegovina
Phone/Fax: +387 57 342 788
Web: http://www.ijeec.org

E-mail: ijeec.journal@gmail.com

IJEEC

International Journal of Electrical Engineering and Computing
Vol. 6, No. 1 (2022)

Original research paper
UDC 004.45:004.388]:621.9
DOI 10.7251/IJEEC2206001N

Workspace and kinematic structure analysis of a 6-DOF Lambda parallel kinematic machine

Ljubomir Nešovanović[1] and Saša Živanović[2]

[1] LOLA Institute, Belgrade, Serbia
[2]University of Belgrade, Faculty of Mechanical Engineering, Belgrade, Serbia

E-mail address: ljubomir.nesovanovic@li.rs, szivanovic@mas.bg.ac.rs

Abstract— **This paper presents workspace and kinematic analysis of a parallel kinematic machine based on the Lambda mechanism. The considered parallel kinematic machine has six degrees of freedom (DOF), achievable with six actuated translation joints. The kinematic analysis includes the definition of every active part of the machine, as well as the definition of every active or passive joint used to connect machine parts. The mathematical model of the machine is created for the better understanding of the machine's operation. The proposed mathematical model of the machine includes inverse kinematic equations, whose solving presents the first step in workspace analysis. In this case, the offered parallel kinematic machine has six active-joint variables, and every active-joint variable is the result of one inverse kinematic equation. Verification of the inverse kinematic equations has been done analytically, using MatLab software and a CAD/CAM system. Workspace analysis, as one of the most important parameters of the parallel kinematic machine, presents the main topic of this paper. In this case two approaches to the workspace analysis are given. The first considered analysis is used to determine the achievable workspace of the machine, and the second analysis is used to determine the total orientation workspace of the machine. Polar coordinates are used to simplify the process of the workspace analysis.**

Keywords- Lambda mechanism; inverse kinematic equations; workspace analysis; CAD/CAM.

I. INTRODUCTION

This paper is based on one part of the research presented in [1] and describes a parallel kinematic machine with six DOF. Parallel kinematic machines have many advantages over serial ones, but one of the biggest problems is a deficient ratio between machine space and workspace [2]. This paper presents one way to achieve the workspace of a parallel kinematic machine. Before analyzing the workspace, it is essential to form the proper kinematic model of the machine and prepare the initial kinematic parameters of the mechanisms, for further analysis.

The main characteristic of the analyzed machine is the Lambda mechanism, on which the machine is based. The first one to use the Lambda configuration was Stewart [3], and the interpreted machine is established on this research. Many ideas of parallel kinematic machines are based on the Lambda mechanism [4-6] and actuated, constant length translation joints are characteristic for all of them, including the machine proposed in this paper. Parallel kinematic machines based on the Lambda mechanism may have two to six DOF. The machine based just on one Lambda mechanism has two DOF and can be upgraded to the hybrid mechanism with four DOF [4]. Same as the machine presented in [5], the parallel kinematic machine proposed in this paper has three Lambda mechanisms and can acquire 6-DOF. The machine shown in [6] has four DOF enabled using three Lambda mechanisms with some limitations. The machine presented in [7], as the machine proposed in this paper, has six DOF achieved using six kinematic chains, whilst two chains are connected to the same shaft using the translation joints. Differences between the proposed machine and the machine presented in [7] are in length and connection of kinematic chains.

The concept of a parallel kinematic machine based on Lambda mechanism with actuated translation joints, the kinematic structure analysis, and inverse kinematic equations are presented below. This paper also presents the verification of inverse kinematic equations and workspace analysis.

II. THE CONCEPT OF A PARALLEL KINEMATIC MACHINE BASED ON THE LAMBDA MECHANISM

The machine analyzed in this paper consists of a stationary base and a moving platform connected with three independent Lambda mechanisms (Fig. 1). Each Lambda mechanism is defined by two kinematic chains, one longer than another, connected with one rotary joint. Therefore, the machine has six kinematic chains.

This paper is a revised and expanded version of the paper presented at the XXI International Symposium INFOTEH-JAHORINA 2022

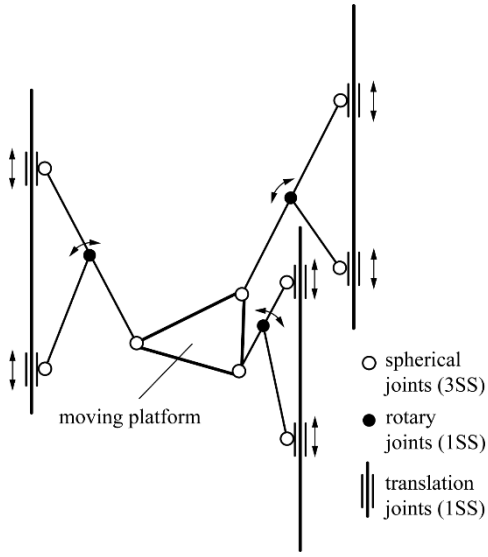

Figure 1. The kinematic model of the machine

Before mathematical analysis, it is necessary to define the design of the Lambda mechanism correctly. The specific position of kinematic chains, their structure, and the type of used joints of the Lambda mechanism are shown in Fig. 2.

Actuated translation joints are positioned on the stationary base. One of the characteristics of the analyzed machine are two translation joints positioned on the same shaft on the stationary base. Each Lambda mechanism is connected with two translation joints on the same shaft on the stationary base, using the spherical joint. The connection between each Lambda mechanism and the moving platform is provided by one spherical joint. As previously said, the Lambda mechanism is defined by two kinematic chains, one longer than another. The rotary connection between the two chains is provided by connecting one side of the smaller kinematic chain to the body of the longer one.

It is crucial to say that the presented machine has three types of joints. The spherical joints offer three DOF, and every DOF provides rotation around one of the three perpendicular axes. The rotary joints provide one DOF for rotation around defined axes. The translation joints provide one DOF for translation in a direction of the required axis. The only actuated joints of the machine are translation joints, and the others are passive joints. For better understanding of the presented machine, graph diagram is shown in Fig. 2.

III. THE KINEMATIC STRUCTURE ANALYSIS OF THE PROPOSED MACHINE

Before analyzing the workspace and optimizing the machine parameters, it is necessary to form a proper mathematical model of the kinematic structure. The proper representation of the kinematic structure of the machine are inverse kinematic equations. For achieving inverse kinematic equations, it is necessary to solve the inverse kinematic problem. Solving the inverse kinematic problem (IKP) means transforming the moving platform's position and orientation vector into the active-joint variables [8].

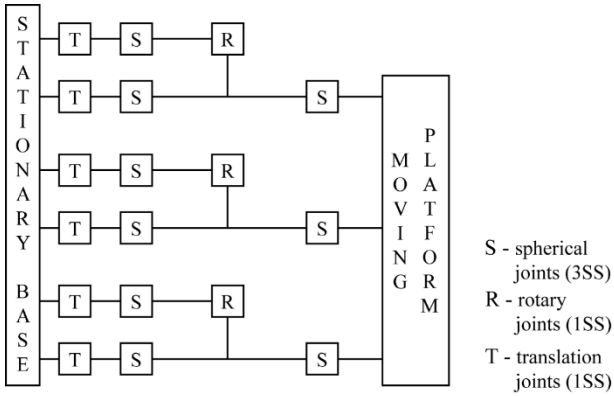

Figure 2. Graph diagram

The machine analyzed in this paper has six independent kinematic chains (Fig. 3), and every chain is connected to the actuated translation joint. The position of every translation joint on the shaft directs the position and orientation of the moving platform. Consequently, the active-joint variable of this machine is the position of the translation joint on the shaft. The vector of every active-joint variable is:

$$\mathbf{l} = \begin{bmatrix} l_1 \\ l_2 \\ \vdots \\ l_6 \end{bmatrix}. \tag{1}$$

The first three elements of the vector are the variables that describe the position of translation joints connected to the longer kinematic chains of the Lambda mechanism. The moving platform's position and orientation vector

$$\mathbf{x_e}=[p_x,\ p_y,\ p_z,\ \Psi,\ \theta,\ \Phi]^T \tag{2}$$

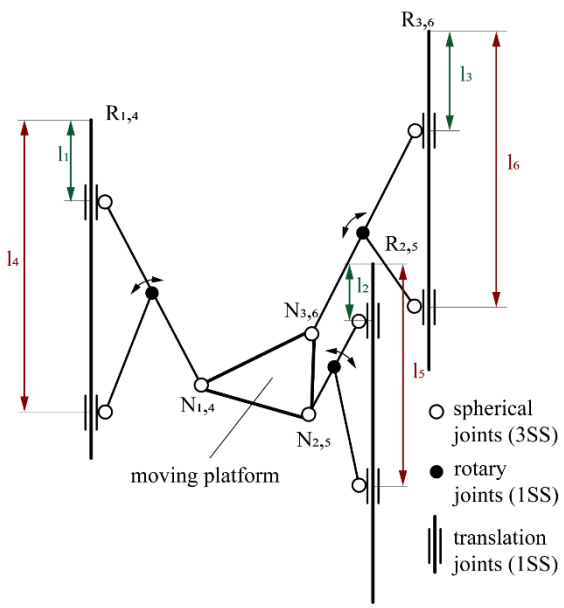

Figure 3. The kinematic model with active-joint positions

is given for inverse kinematic equation solving [8]. The value of the machine parameters is also given. The machine parameters are the stationary base dimension (C), the moving platform dimension (D), the dimension of longer kinematic chains (c_i), the dimension of smaller kinematic chains (u_i), and the dimension between kinematic chain connection (of Lambda mechanism) and platform (r_i).

In this case, geometric methods solve the inverse kinematic problem. It is necessary for the machine with six active-joints to create six equations. The starting point was creating a vector equation that could connect the zero-position point of the active-joint on the stationary base (R) and the corresponding point on the moving platform (N). Vectors used in mathematical derivations are platform position vector (${}^{B}\mathbf{p}_{O_P}$), joint position on the platform vector (${}^{P}\mathbf{p}_{Ni}$), joint position on the base vector (${}^{B}\mathbf{p}_{Ri}$), the direction of the actuated joint vector (${}^{B}\mathbf{a}_{i}$), and unit vectors of orientation (${}^{B}\mathbf{w}_{i}$, ${}^{B}\mathbf{z}_{i}$, ${}^{B}\mathbf{q}_{i}$). Fig. 4 shows that the connection between the N point on the stationary base and the R point on the moving platform (k_i) can be described with three vector equations [9]:

$$k_i\,{}^{B}\mathbf{w}_i = {}^{B}\mathbf{p}_{O_P} + {}^{B}_{P}R\cdot{}^{P}\mathbf{p}_{Ni} - {}^{B}\mathbf{p}_{Ri} \quad (i=1,2,\ldots,6), \tag{3}$$

$$k_i\,{}^{B}\mathbf{w}_i = l_i\,{}^{B}\mathbf{a}_i + c_i\,{}^{B}\mathbf{z}_i \quad (i=1,2,3), \tag{4}$$

$$k_i\,{}^{B}\mathbf{w}_i = l_i\,{}^{B}\mathbf{a}_i + u_i\,{}^{B}\mathbf{q}_i + r_i\,{}^{B}\mathbf{z}_i \quad (i=4,5,6). \tag{5}$$

The equation (3) can be used for solving all six equations. Equation (4) is reserved for finding the result of the first three active-joint variables. Equation (5) can solve equations connected to the last three active-joint variables. This equation presents a starting point for solving the inverse kinematic problem. After mathematical derivation, the solution of the inverse kinematic problem is presented with six equations for every active-joint variable [1]:

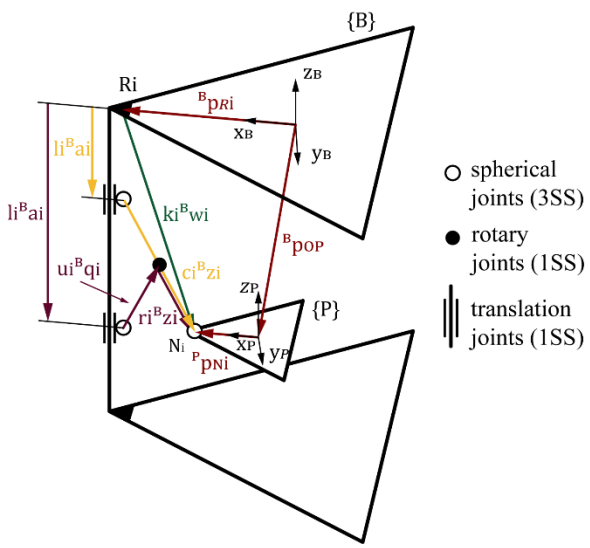

Figure 4. The kinematic model with required vectors

$$l_1 = \left(-z_p + D\cdot s\theta\right) - \sqrt{\left(-z_p + D\cdot s\theta\right)^2 - \left(k_1^2 - c_1^2\right)}, \tag{6}$$

$$l_2 = \left(-z_p - \tfrac{1}{2}D\cdot s\theta + \tfrac{\sqrt{3}}{2}D\cdot c\theta\cdot s\Psi\right) - \sqrt{\left(-z_p - \tfrac{1}{2}D\cdot s\theta + \tfrac{\sqrt{3}}{2}D\cdot c\theta\cdot s\Psi\right)^2 - \left(k_2^2 - c_2^2\right)}, \tag{7}$$

$$l_3 = \left(-z_p - \tfrac{1}{2}D\cdot s\theta - \tfrac{\sqrt{3}}{2}D\cdot c\theta\cdot s\Psi\right) - \sqrt{\left(-z_p - \tfrac{1}{2}D\cdot s\theta - \tfrac{\sqrt{3}}{2}D\cdot c\theta\cdot s\Psi\right)^2 - \left(k_3^2 - c_3^2\right)}, \tag{8}$$

$$l_4 = l_1 + {}^{B}\mathbf{a}_4\cdot\left(c_1 - r_4\right)\cdot{}^{B}\mathbf{z}_4 + \sqrt{\left({}^{B}\mathbf{a}_4\cdot\left(c_1 - r_4\right)\cdot{}^{B}\mathbf{z}_4\right)^2 - \left(\left(c_1 - r_4\right)^2 - u_4^2\right)}, \tag{9}$$

$$l_5 = l_2 + {}^{B}\mathbf{a}_5\cdot\left(c_2 - r_5\right)\cdot{}^{B}\mathbf{z}_5 + \sqrt{\left({}^{B}\mathbf{a}_5\cdot\left(c_2 - r_5\right)\cdot{}^{B}\mathbf{z}_5\right)^2 - \left(\left(c_2 - r_5\right)^2 - u_5^2\right)}, \tag{10}$$

$$l_6 = l_3 + {}^{B}\mathbf{a}_6\cdot\left(c_3 - r_6\right)\cdot{}^{B}\mathbf{z}_6 + \sqrt{\left({}^{B}\mathbf{a}_6\cdot\left(c_3 - r_6\right)\cdot{}^{B}\mathbf{z}_6\right)^2 - \left(\left(c_3 - r_6\right)^2 - u_6^2\right)}. \tag{11}$$

IV. VERIFICATION OF THE INVERSE KINEMATIC EQUATIONS

Verifying the inverse kinematic equations on a virtual prototype is vital before using equations (6)-(11) in workspace analysis. The inverse kinematic equations have been verified using two software, MatLab and PTC Creo Parametric. Usage of PTC Creo Parametric has created a simplified CAD model of the machine, and MatLab software has been used to find the most effective solution of the inverse kinematic equations.

The important measurements are done on a virtual model using PTC Creo software (Figs. 5 and 6). Dimensions required from the model were parameters of the machine and the moving platform position and orientation vector. The starting point for all measurements is defining the proper coordinate systems of the stationary base (IKP) and the moving platform (TP). The stationary base coordinate system is presented as a zero vector and presents a starting point for every analysis. The coordinate system of the platform represents the platform's position and orientation. Software PTC Creo Parametric generated a measurement tool to provide the transformation matrix that has all the necessary information about the platform's position and orientation (Fig. 5). After measurement, the required dimensions are imported into the MatLab program. The product of the created program are the active-joint variables. The active-joint variable can be measured on the virtual prototype of the machine (Fig. 5). The measured dimension between every translation joint and XY plane of the stationary base's coordinate system presents an active-joint variable.

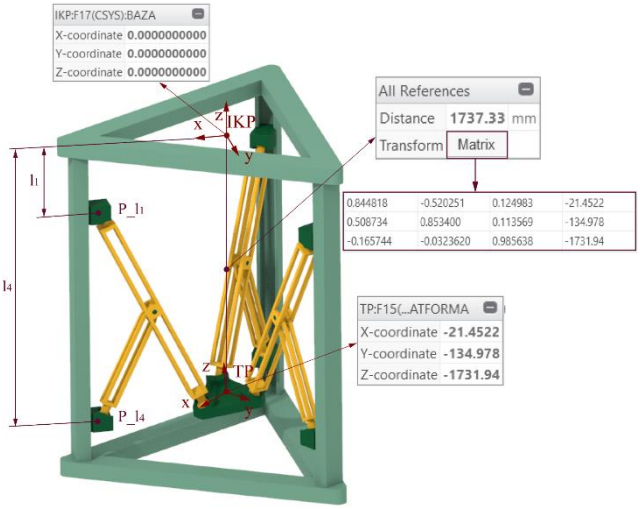

Figure 5. The measurement's on CAD model

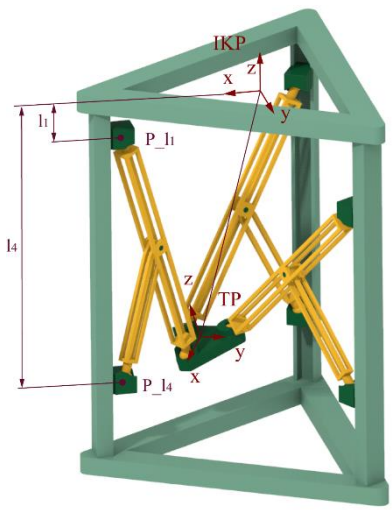

Figure 6. Second measuring experiment

Evaluation of inverse kinematic equations is done by comparing the active-joint variable measured on a virtual model and generated using the MatLab program. This comparison is made for two different positions of the moving platform. The first position of the platform shown in Fig. 5 is used for experiment 1, while the platform position shown in Fig. 6 is used for experiment 2. Comparing both ways generated active-joint variables confirms inverse kinematic equations (Tab. 1).

TABLE I. COMPARISON OF BOTH WAYS GENERATED ACTIVE-JOINT VARIABLES

	Experiment 1		Experiment 2	
Active-joint variable	CAD model [mm]:	MatLab code [mm]:	CAD model [mm]:	MatLab code [mm]:
l_1	398.89	398.88	164.59	164.60
l_2	299.68	299.67	223.16	223.16
l_3	414.67	414.66	467.37	467.37
l_4	1758.75	1758.73	1587.58	1587.59
l_5	1714.02	1714.01	1565.02	1565.03
l_6	1723.08	1723.07	1514.00	1514.00

The difference between the active-joint variable measured on a CAD model and generated using the computer program shown in Tab. 1 results from multiple conversions and measurement errors. Proposed inverse kinematic equations accuracy is proven, and offered equations can be used in future machine analysis.

V. WORKSPACE ANALYSIS

Workspace is one of the most important parameters in machine tool design. For parallel kinematic machine tools, the workspace is usually a weak point of the machine design and presents a vital parameter. Because of this characteristic, workspace analysis is often a starting point for parallel kinematic machine designing. Some of the main dimensions of the machine can be generated from the workspace analysis, and the workspace can have different shapes and sizes depending on the machine's design.

There are multiple approaches to workspace analysis because of many possible usages of parallel kinematic machines. This paper presents the two approaches to workspace analysis. The first approach is based on the achievable workspace, and the second is based on the total orientation workspace.

A. Achievable workspace

Achievable workspace is the machine's workspace whose end-effector can reach every workspace point in any orientation [10]. The provided machine parameters are the stationary base's dimension, the moving platform's dimension, and the dimensions of the kinematic chains. The machine parameters used for workspace analysis are adopted for regular size machine tools and implemented in a simplified CAD model of the machine. The exact value of every parameter is shown in [1].

Because of the specific machine design, it is difficult or even impossible to generate the machine's workspace geometrically. In this case, the analytical method based on the computer code programmed in MatLab software is used for obtaining the achievable workspace, and created code is acquired on the algorithm shown in Fig. 7.

As previously said, the analyzed machine has 6-DOF and, intuitively, both types of the workspace are tridimensional. Because of the specific kinematics, the achievable workspace of the machine has no traditional design. In this case, polar coordinates (z, ρ, β) are used for achievable workspace analysis. For the better understanding, the procedure of the workspace analysis is shown graphically in Fig. 8. The first step in finding the achievable workspace design is to divide the achievable workspace into the planes perpendicular to height (z). After splitting, all the analyses are done on each plane of the divided workspace. The starting position for the analysis of each plain is zero value of the polar coordinates (ρ and β). The first polar coordinate (ρ) presents the axial distance between the z-axis and the desired point, and the second polar coordinate (β) is the angle from the positive x-axis to the first polar coordinate.

After defining all values of polar coordinates, it is necessary to convert polar coordinates to the Cartesian coordinates (x, y, z). This conversion uses the inverse kinematics equations and the required limits to verify the defined point possible to achieve in any end-effector orientation. The first step in this procedure is to find the first height that can be reached with the end-effector.

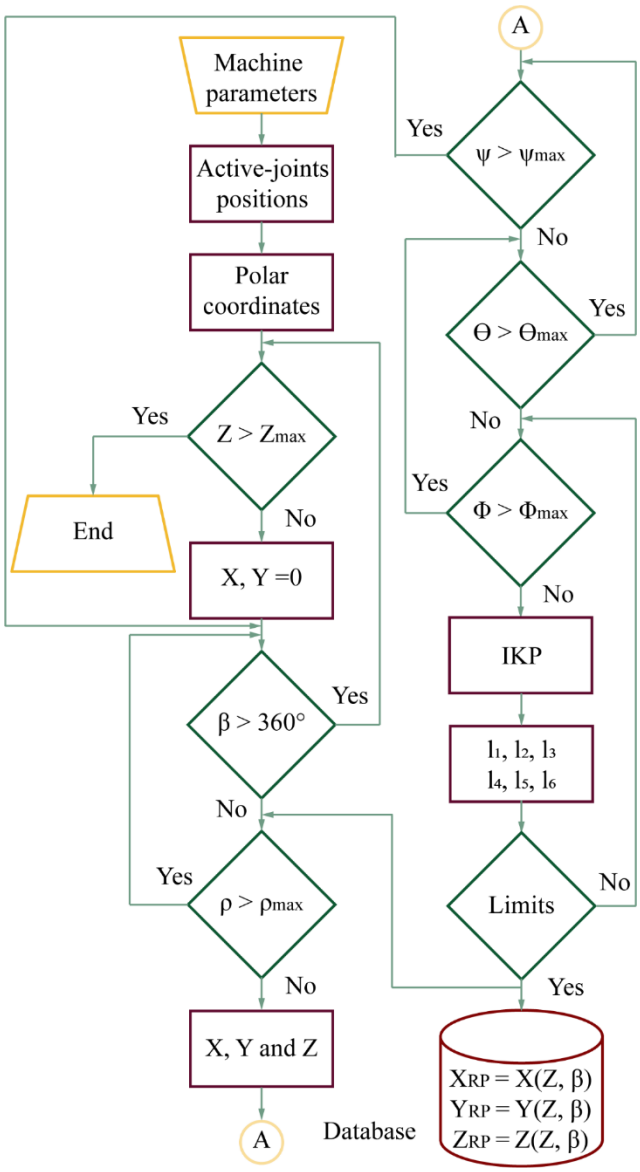

Figure 7. Block diagram for achievable workspace analysis

The second step is to raise the value of polar coordinate ρ iteratively and, after every raise, convert polar coordinates to Cartesian coordinates and verify them. The first point that does not come through verification is dismissed, and the polar coordinate β rises value, while the polar coordinate ρ is set to value zero. The variable used for raising the value of polar coordinates is a given constant.

The shape and size of the achievable workspace analyzed on a plain defined by height (z) is completed, after achieving the total circle value with polar coordinate β, by connecting the points with a high value of polar coordinate ρ for every polar coordinate β (Fig. 9). The process is iteratively repeated for every plain defined by height. The machine's achievable workspace is shown in Fig. 10, and it presents the analyzed planes while every plain is connected.

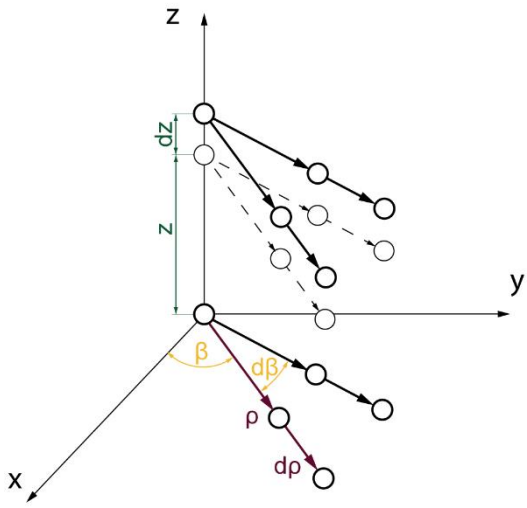

Figure 8. The workspace analysis

The presented achievable workspace has a specific shape because of the required limits of the active-joint variables. The value of the defined limits is set using the geometry to avoid the collision of active machine parts. Required limits are used to determine the connections between active machine parts as well as to define the proposed mechanism itself. Importing the needed limits in the mathematical model of the machine shows a more realistic presentation of the achievable workspace.

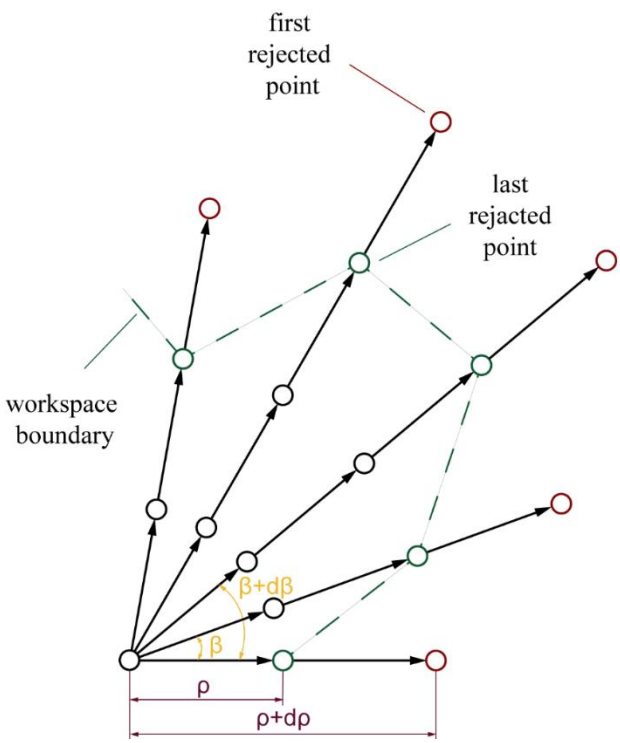

Figure 9. Workspace analysis on a single plain

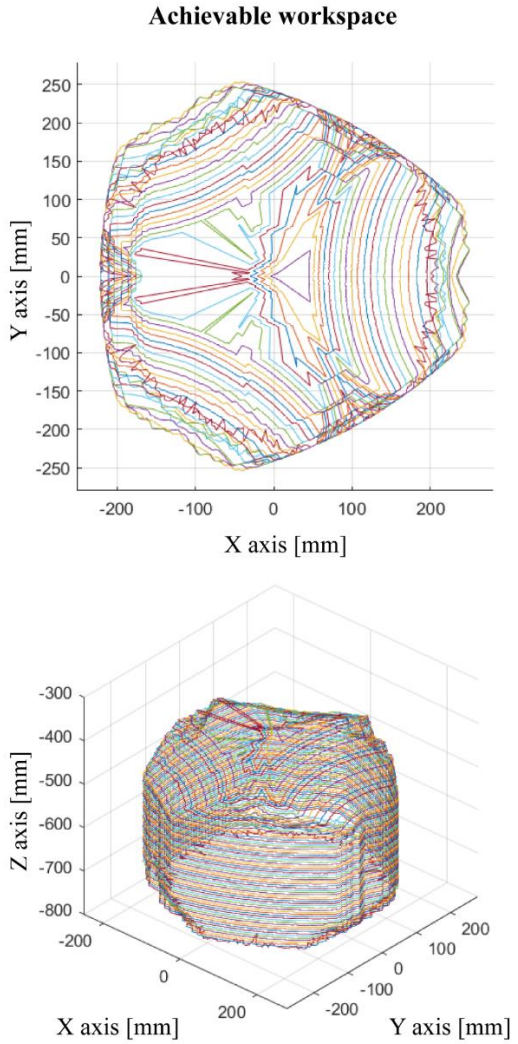

Figure 10. The achievable workspace

The first limitation of the proposed mechanism is the maximal and minimal length that the translation joint can reach on the shaft. The total length of all three shafts is the limitation that limits the height of the achievable workspace. Fig. 11 a) shows the design of an achievable workspace generated with previously defined limits.

The second limitation is needed because the proposed mechanism has six translation joints and three shafts, where every shaft has two translation joints positioned on it. Because of this characteristic, a collision between two translation joints positioned on the same shaft is possible. This type of collision is avoided by including limitations in the mathematical model, which defines minimal length between two translation joints on the same shaft. Design of the achievable workspace generated with previously described limitations is shown in Fig. 11 b).

The final design of achievable workspace is demonstrated in Fig. 11 c) and includes one more limitation imported into the mathematical model. The last limitation presents the maximal length between two translation joints positioned on the same shaft. This limitation prevents collision between two kinematic chains of the same Lambda mechanism.

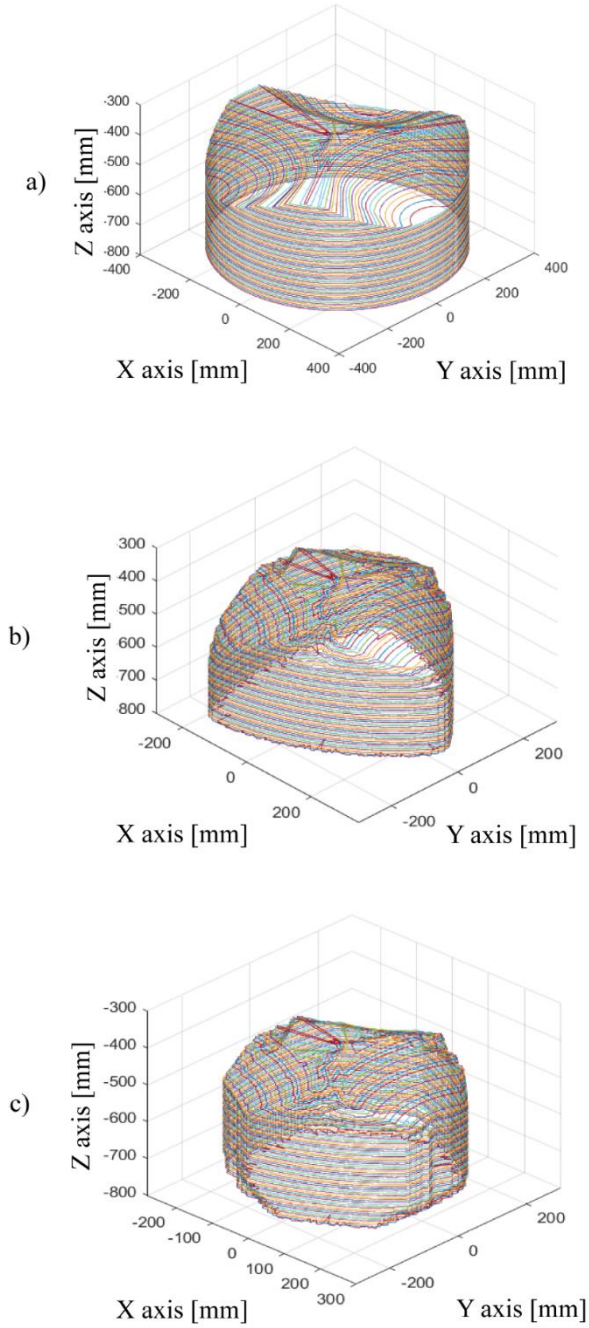

Figure 11. The TOW workspace

B. *Total orientation workspace*

Total orientation workspace (TOW) presents the workspace achievable with the end-effector in every orientation for determined Euler angles [11]. In the TOW analysis for the proposed machine, Euler angles (Ψ, θ and Φ) are set on a value between -15 and 15 degrees. Intuitively the TOW is part of the achievable workspace, and TOW can also be defined as a set of points reachable with an end-effector in every orientation for the specified Euler angles.

As the part of the achievable workspace, the process of gaining the TOW is similar to the previously explained one, for gaining the achievable workspace. As in the case of the analysis of achievable workspace, the design of TOW is generated using the computer code programmed in MatLab. The algorithm used

for acquiring this computer code is shown in Fig. 12. Because of the similarity in the procedure of gaining the workspace, the presented algorithm is similar to the one used in achievable workspace analysis.

In the achievable workspace analysis, every point which can be reached with the end-effector and does not cross any defined limitation is imported into the database. This is not the case for TOW analysis, and the coordinates of the considered point must fulfill one more condition. The necessary condition is that the considered point must be reachable with the end-effector in every orientation for defined Euler angles values.

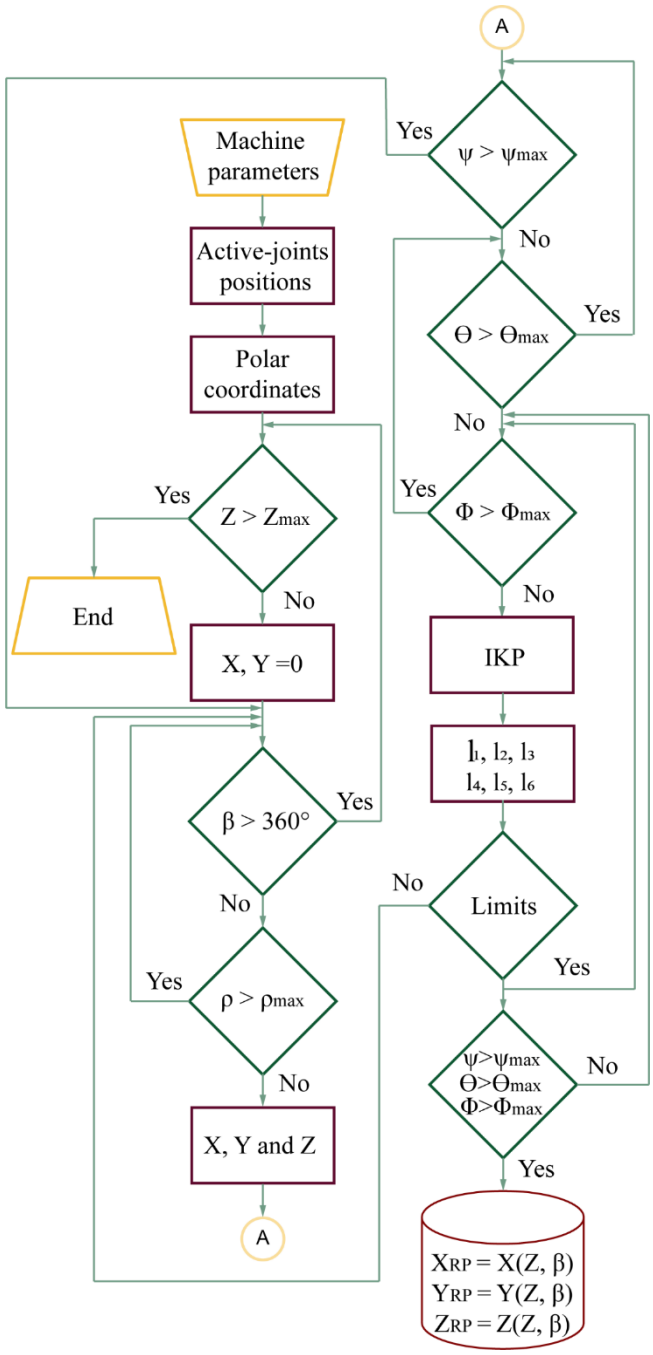

Figure 12. Block diagram for TOW workspace analysis

If this condition is fulfilled, the coordinates of the considered point can be imported into the database. This means that the active joint variables can pass defined limits for every end-effector orientation. The explained condition is the crucial difference between achievable workspace analysis and TOW analysis. It is important acknowledging that if any of the defined limitations is crossed, considered point coordinates are erased, and the process of TOW analysis is continued by increasing the value of the polar coordinate (β).

Furthermore, it is important emphasizing the fact that the limitations used in TOW analysis are the same as the ones used for achievable workspace. Defined limitations have the same effect on the TOW design as they have on the design of achievable workspace shown in Fig. 11.

After comparing the generated achievable workspace and the TOW, the conclusion is that TOW has much smaller dimensions than the achievable workspace (Fig. 13). This conclusion is implied because of the conditions included in the TOW analysis but not in the achievable workspace analysis. It is important to state that the design of the TOW and the achievable workspace is symmetrical around the X-axis, and the defined symmetry is caused by the specific kinematics design of the proposed machine.

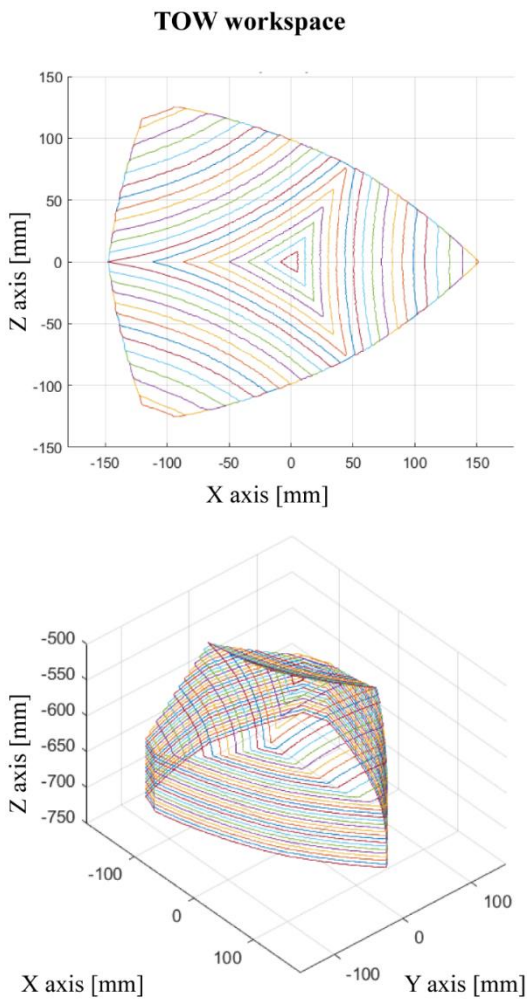

Figure 13. The TOW workspace

VI. Conclusion

The main results established in this paper are inverse kinematic equations generated from the geometric model of the machine and workspace analysis. These shown results are helpful for better understanding of the proposed machine.

Derived inverse kinematic equations with given input parameters can generate the active joint variables – the positions of the active translation joints on the shaft. With inverse kinematic equations, it is possible to develop the proper workspace of the parallel kinematic machine. Before using the inverse kinematic equations in the workspace analysis, it is crucial to verify them. The verification is done by using PTC Creo Parametric and MatLab software. Comparison of active-joint variables generated with these two software packages has confirmed the accuracy of the inverse equations.

The established workspace has a complex tridimensional shape, and the characteristic structure of the machine can explain the complex design of the workspace. Presented workspace analysis is based on the polar coordinates, because polar coordinates may offer many advantages in the geometrical analysis of the tridimensional workspace of the machine.

The workspace analysis can help define the dimensions of the machine's active elements and the dimension of passive components. This characteristic can help optimize the basic parameters and whole size of the machine.

Future research may possess the optimization of workspace based on changing the parameters of the machine. Optimized workspaces can show proper directions for the usage of the machine.

Acknowledgment

The presented research was supported by the Ministry of Education, Science and Technological Development of the Republic of Serbia by contract no. 451-03-68/2022-14/200105 dated 4 February 2022 and by contract 451-03-68/2022-14/200066 dated 2022.

References

[1] Lj. Nešovanović, "Machine tool configuration based on Lambda parallel kinematic mechanism with actuated translation joints", The Master's degree final project, University of Belgrade, Faculty of Mechanical Engineering, 2021, (in Serbian).

[2] T. Boye and G. Pritschow, "New Transformation and Analzsis of a N-DOF LINAPOD with six struts for higher accuracy", Robotica, Cambrige University Press, 2005, vol. 23, pp. 555-560.

[3] D. Stewart, "A platform with 6 degrees of freedom", Proceeding of the Institution of mechanical engineers, London, U.K., 180, 1965, pp. 371-386.

[4] KIN_TYP_21–Lambda kinematics, https://www.isg-stuttgart.de/kernel-html5/en-GB/292699915.html, 9.9.2021.

[5] A. Verl, N. Croon, C. Kramer, and T. Garber, "Force Free Add-on Position Measurement Device for the TCP of Parallel Kinematic Manipuators", Annals of the CIRP vol. 55, Stuttgart, Germany, 2006.

[6] A. Acuta, O. Company, F. Pierrot, "Design of Lambda-quadriglide, a new 4-dof parallel kinematic mechanism for schonfilies motion", IDETC/CIE, Montreal, Quebec, Canada, 2010.

[7] G. Pritschow, C. Eppler, T. Garbet, "Influence of the dynamic stiffness on the accuracy of PKM", Paralel kinematics seminar, 2002, University of Stuttgart, Germany.

[8] D. Milutinović, "AT-4: Manipulator kinematics, Industrial robots – lecture manuscript's", University of Belgrade, Faculty of Mechanical Engineering, 2019 (in Serbian).

[9] D. Milutinović, "AN-5 i AN-6: Parallel kinematic machines, Machine tools and robots of the new generation – lecture manuscript's, University of Belgrade, Faculty of Mechanical Engineering, 2012 (in Serbian).

[10] D. Milutinović, "AT-1: Definition, functional structure, and classification of industrial robots; Kinematic structure of robots – manipulators, Industrial robots – lecture manuscript's, University of Belgrade, Faculty of Mechanical Engineering, 2019 (in Serbian).

[11] J.P. Marlet, C. Gosselin, N. Mouly, "Workspace of planar parallel manipulators", Mechanism and Machine Theory, vol. 33. no. 1-2, pp. 7-20, 1998.

Ljubomir Nešovanović (1997) received the B.Sc. and M.Sc. degree in Mechanical Engineering from the University of Belgrade, Republic of Serbia. He is working as a junior researcher at the LOLA Institute. His field of research interest include parallel kinematic machines and manufacturing.

Saša Živanović (1969) is a Full Professor at Faculty of Mechanical Engineering, University of Belgrade, Serbia. His current research interests are machine tools, parallel kinematic machine tools, reconfigurable machine tools, STEP-NC, robots for machining, CAD/CAM, Wire EDM, and rapid prototyping.